SIDE VIEW

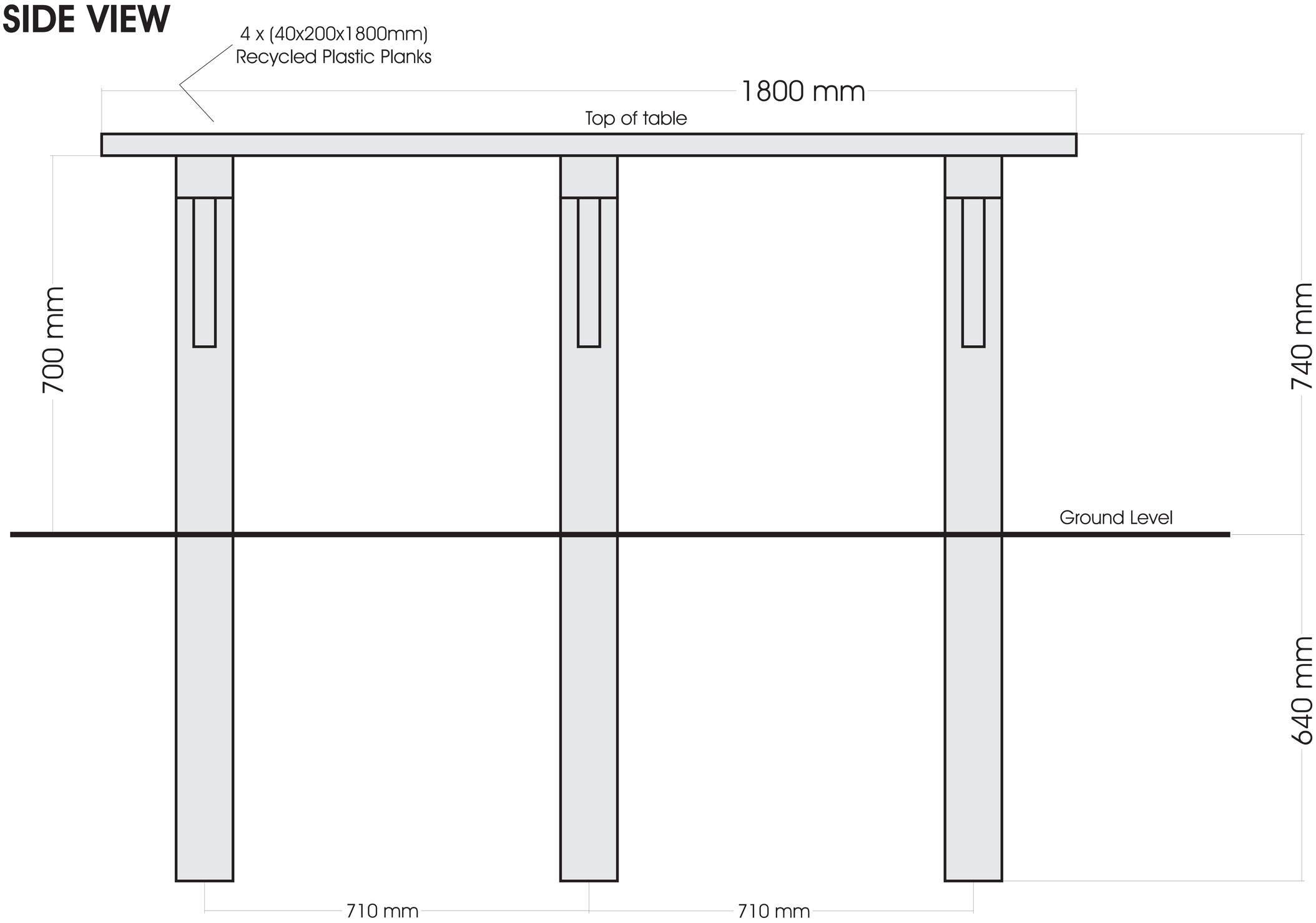

END VIEW WITH BENCHES

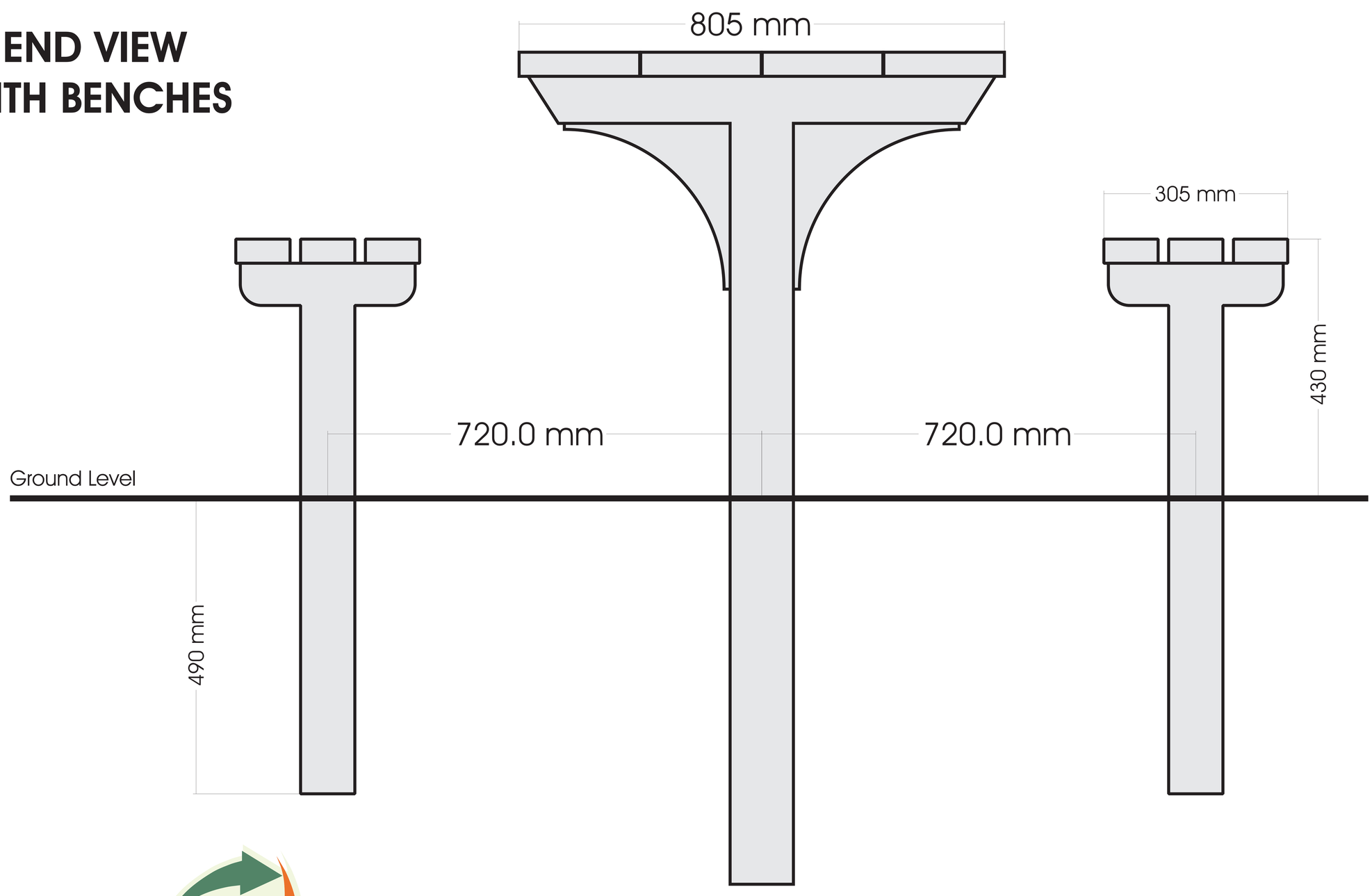

EnviroPLAS

EnviroPlas Products Pty Ltd

ABN: 43 105 082 852

Recycled Plastic Products

©

Drawn by: Nicol CAD Graphics Pty Ltd
18 April 2008

LBS-1800IG LYREBIRD IN GROUND SETTING