Drawn by Nicol CAD Graphics
14 Dec 2007

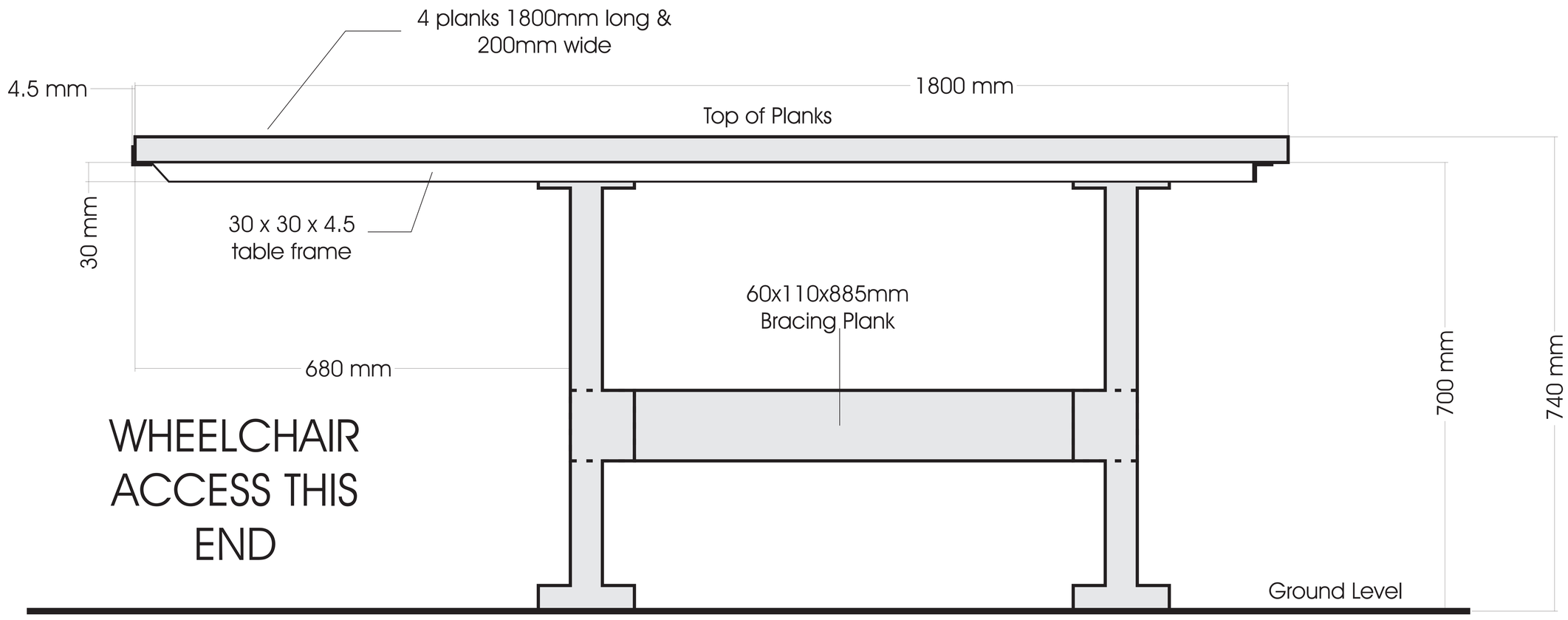

SIDE VIEW

Note: Table Frame and
40 x 200mm planks
are factory assembled

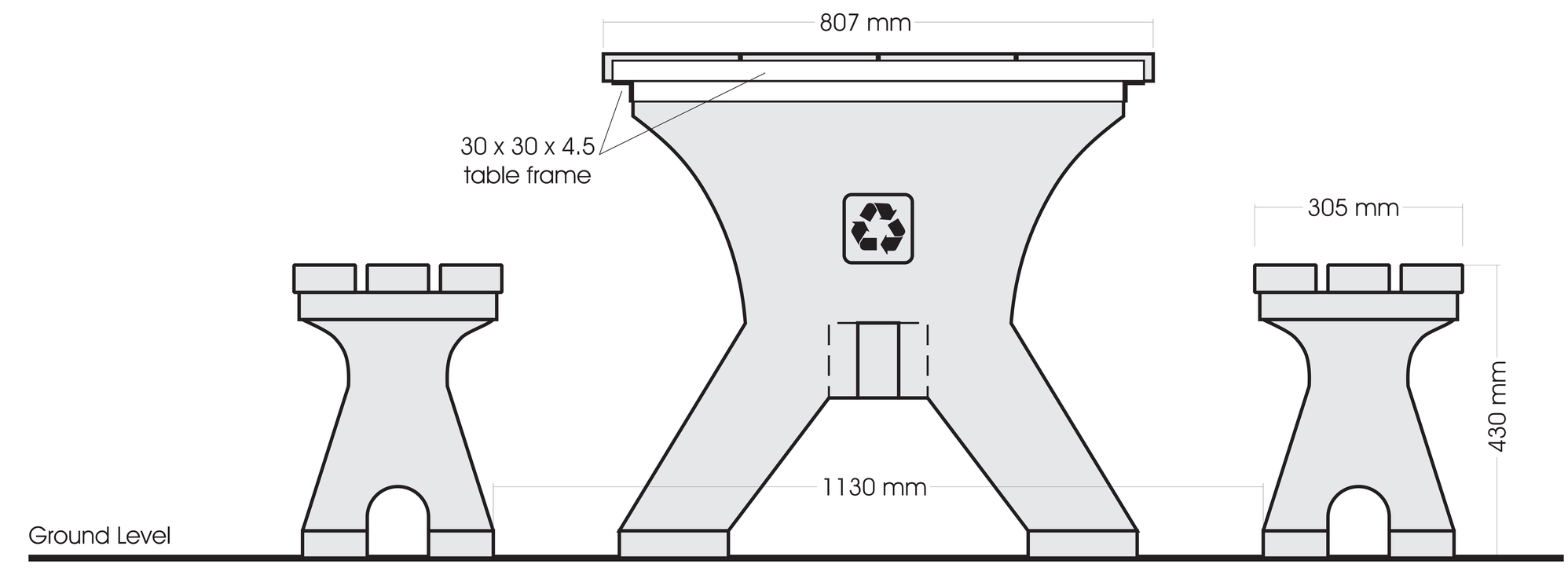

END VIEW

EnviroPlas Products Pty Ltd
Recycled Plastic Products

Drawn by Nicol CAD Graphics
14 Dec 2007

**FREE STANDING
WHEELCHAIR
ACCESSIBLE
PICNIC TABLE**

©