SIDE VIEW

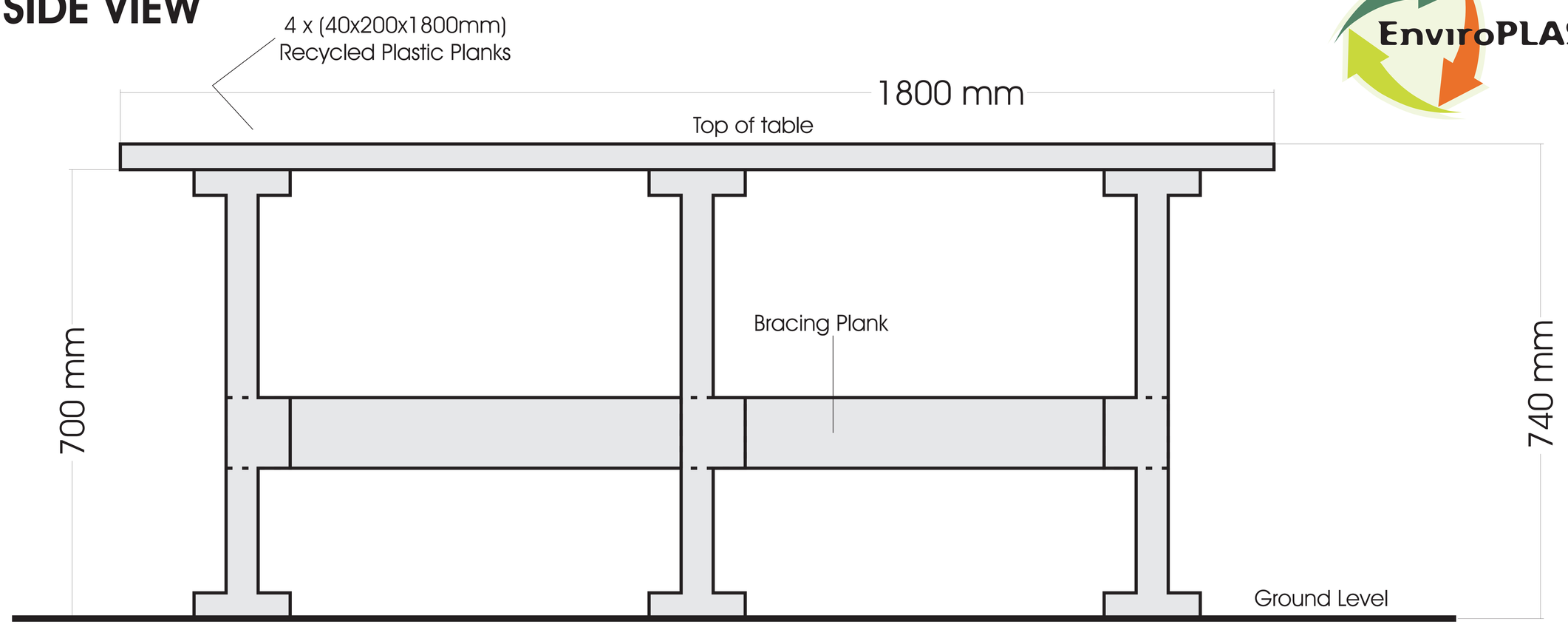

TOP VIEW

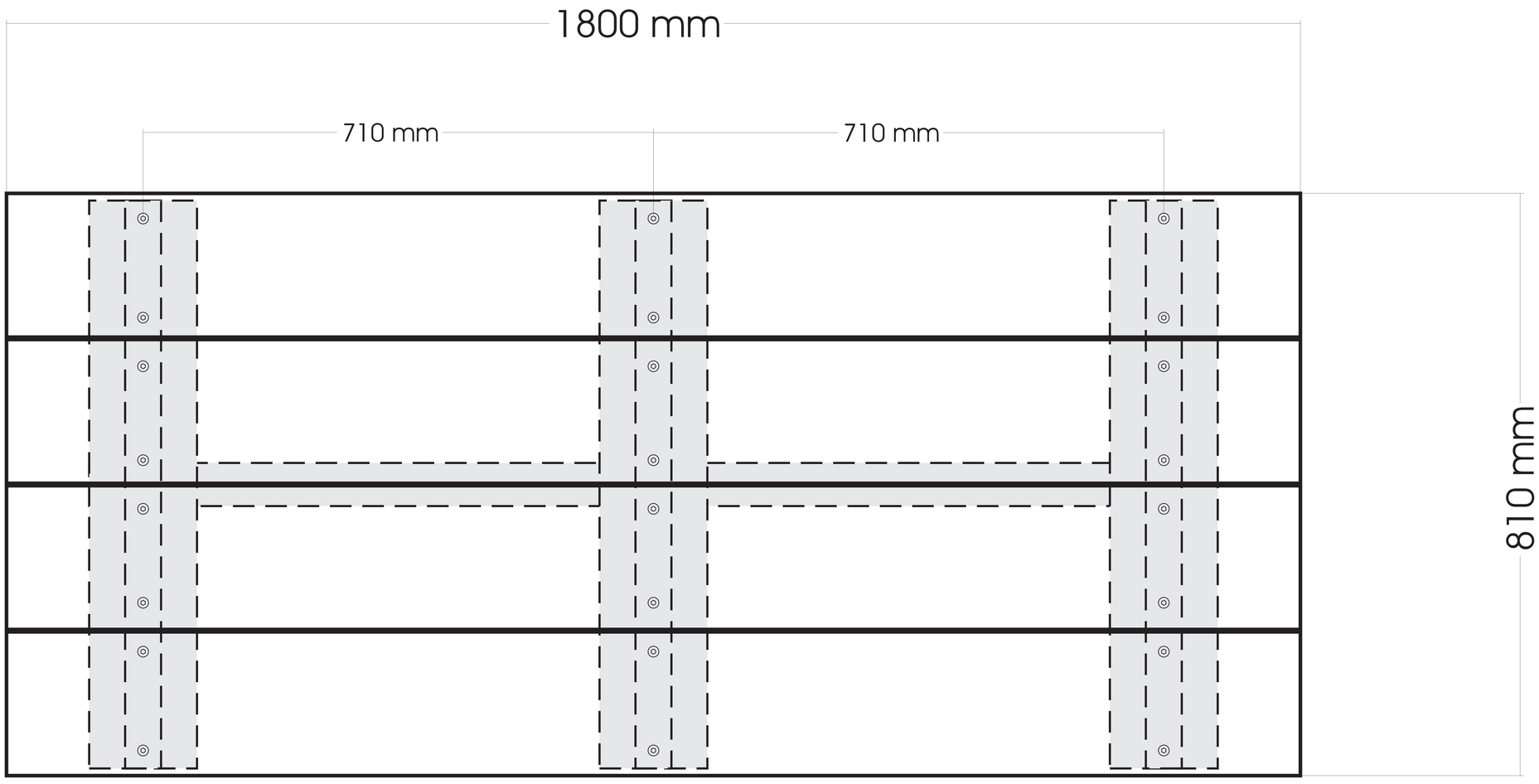

END VIEW WITH BENCHES

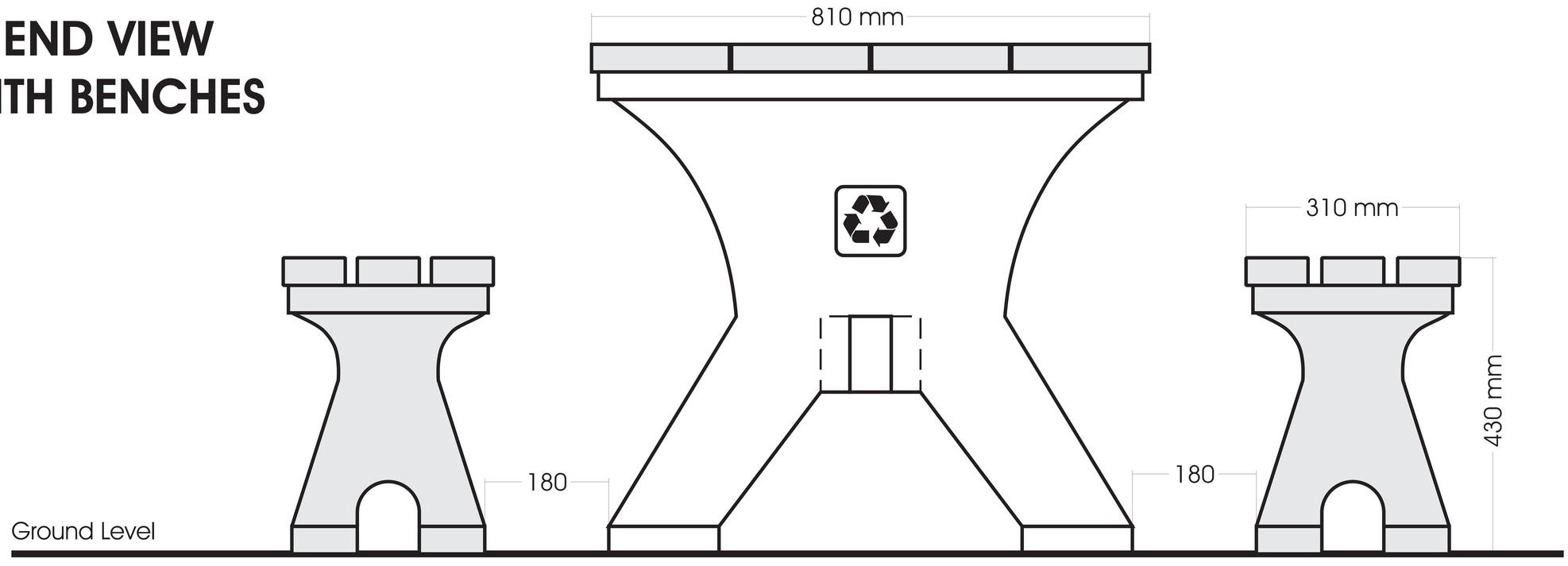

EnviroPlas Products Pty Ltd

ABN: 43 105 082 852

Recycled Plastic Products

Drawn by: Nicol CAD Graphics Pty Ltd
18 April 2008

©

LBS-1800FS LYREBIRD FREE STANDING SETTING